# NEW DIRECTIONS | AUSTRALIA

nda@newdirections.com.au | www.newdirections.com.au

47 CARRINGTON ROAD MARRICKVILLE, SYDNEY NSW 2204 AUSTRALIA | T: 612 8577 5999 | F: 612 8577 5977 | TOLL FREE: 1800 637 697


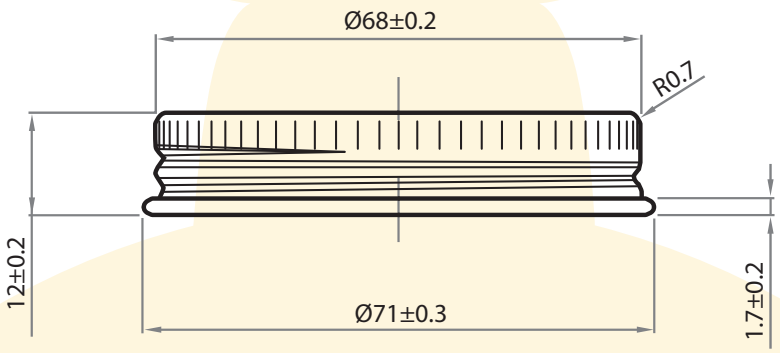


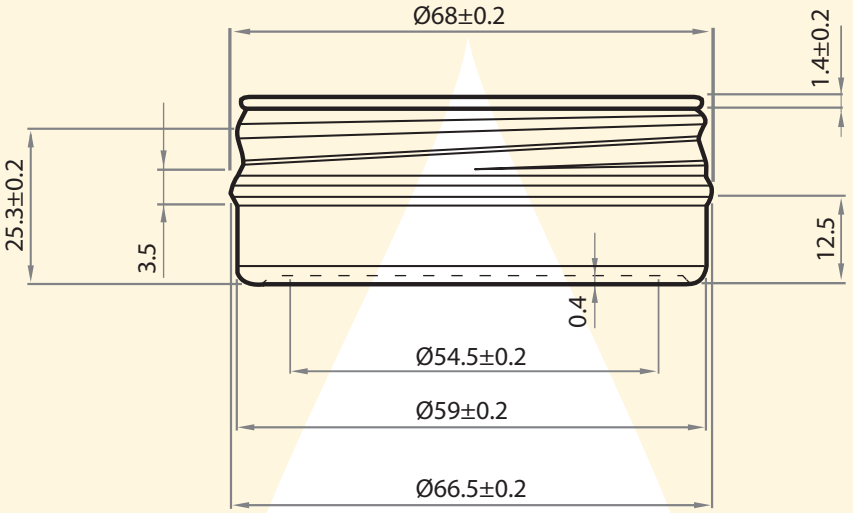

| | |
|---|---|
| PRODUCT CODE | CMAC60 |
| DESCRIPTION | 60ml Aluminium Canister |
| WIDTH | 66.5mm ±0.2 |
| HEIGHT | 26.6mm ±0.52 |
| NECK SIZE | N/A |
| MATERIAL | Aluminium |
| LINING | Cosmetic Grade Epoxy Resin Lining |
| LABEL DIMENSIONS* | LID & BASE LABELS: 73mm (D) |
| BPA FREE | YES |
| RECYCLABLE | YES |
| NOTES | Aluminium Thickness: 0.4mm |
| DATE DRAWN | Feb/03/2016 |

Always store your packaging away from direct sunlight, at temperatures below 30°C

Product compatibility testing is highly recommended when selecting (new) packaging.
Always make sure you perform stability testing of your product in it's final packaging

**New Directions recommends testing the label size against physical sample of packaging prior to producing labels.*